Well

All dimensions may not exceed perpendicular tolerance of ±2 cm

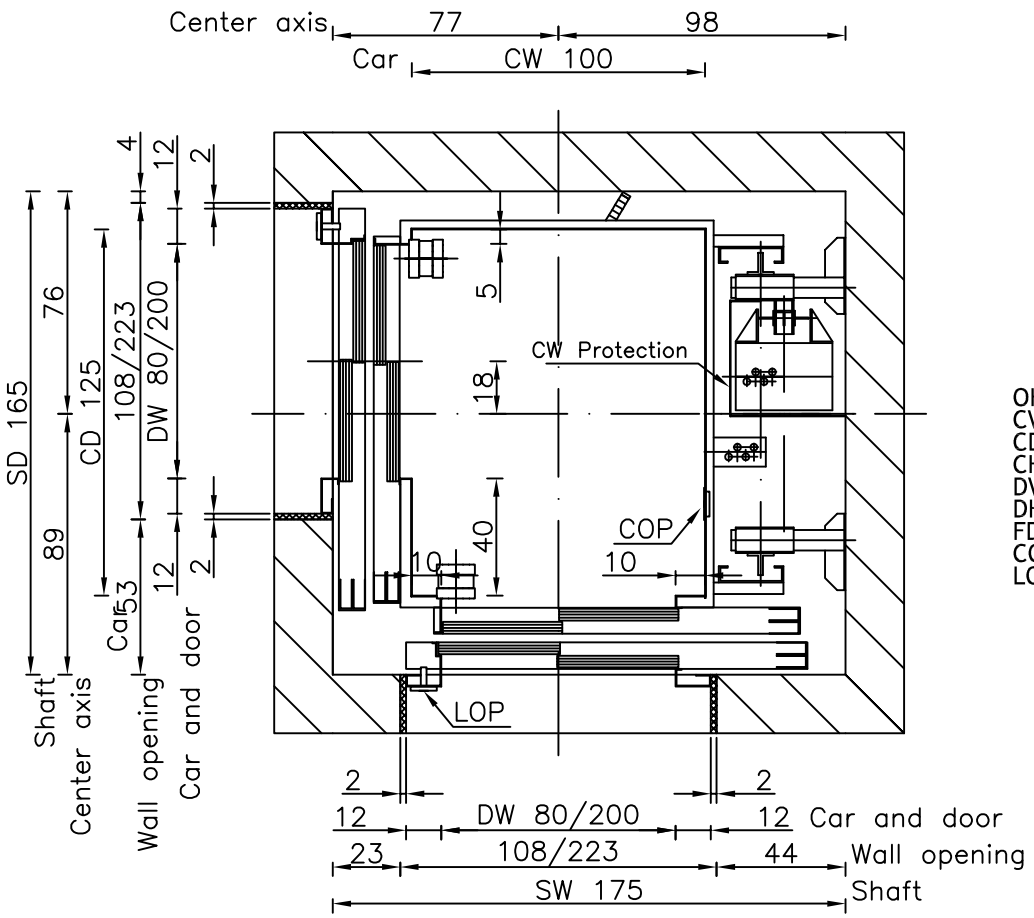

OH = Overhead
CW = Car width
CD = Car depth
CH = Car height
DW = Door widh
DH = Door height
FD = Floor distance
COP= Car Operating Panel
LOP= Landing Operating Panel

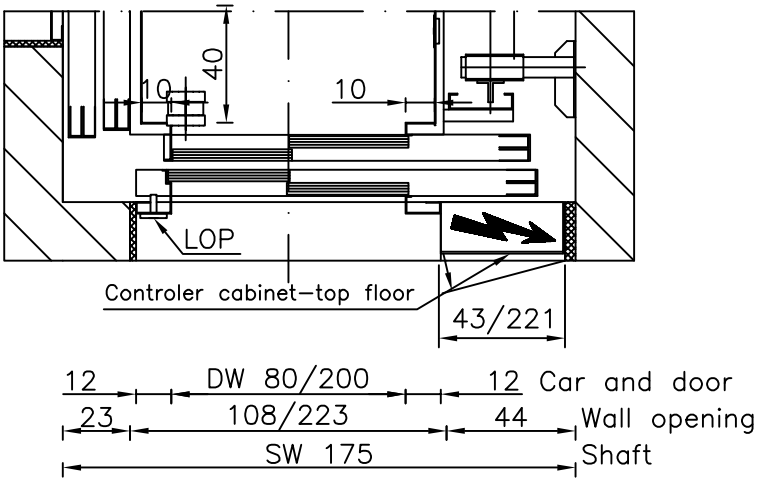

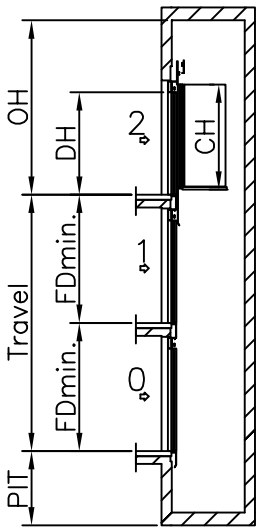

Speed: 1 m/s PIT: 120 cm OH: 360 cm	
CW: 100 cm CD: 125 cm CH: 210 cm	DW: 80 cm DH: 200 cm
FDmin.: 250 (CH+50 cm)	

TYPICAL POWER REQUIREMENTS	
Motor Power (k.W.)	7,3kW
Running current	17,5A
Starting current	25 A
Overload current	32,5A

Type: GEARED MRL 480 kg TR8-TR8		Drawn By: Tomi Irgolič Date: 19.10.2006	SEC
ELECTRIC	A4 1:20	Revision: 00	Page: 45

Dimensions in cm.